USER GUIDE

Programmable Cam Controller

EPC16/EPC48

ZANDER AACHEN

H. Zander GmbH & Co. KG

Am Gut Wolf 15

D-52070 Aachen

www.zander-aachen.de

No liability above and beyond our warranty conditions can be accepted for faultlessness of the software/hardware and for damages resulting from operation of the device.

All components are subjected to rigorous quality testing before being delivered. If used and operated correctly, we grant a two years warranty on all hardware components starting from the date of delivery. The warranty service is restricted to repair free of charge on our premises.

Subject to technical change without previous notice.

V3.0 04/2000

Contents

1 Introduction

our experience to your advantage

EPC electronic cam switching devices - the intelligent solution to your control problem. Programming unit, display and controller in one device!

Programmed Logic Controls have asserted themselves thanks to their flexibility and efficiency. In 1982 ZANDER became one of the first companies to use microprocessor technology consistently in the realization of electronic program and cam switching devices.

Today our devices are proving themselves in almost all sectors of industry in hard daily use. EPC control systems are top-of-the-range program switching devices equipped with a 16-bit processor system. They carry out angle or distance-dependent control tasks, for example on packing machines, wood processing machines or automatic production machines.

This manual describes the EPC16 and EPC48. The main differences between these variants are as follows:

EPC variants

- EPC16: 16 outputs, 32 programs, splash/dust-proof sealed keyboard
- EPC48: 48 outputs, 32 programs, modular Eurocard configuration, splash/dust-proof sealed keyboard, input for external program changeover, maximum processing power/speed

All EPC devices are operated in the same way, thus easily permitting mixed application. The explanations contained in this manual relate to all EPC variants, with reference to any differences between devices being made in the respective section.

All EPC's have connection facilities for an absolute or incremental angle/distance encoder which makes the mechanical assignment to the processing machine.

Clear text dialogue makes programming extremely simple and easy to learn by anyone within a short time. External programming devices are not required. However, Personal Computers can be used for saving data, programming and loading data into the EPC.

Easy connection with PLC, machine terminals or PCs is possible through the 48 digital switching outputs or the serial V24 interface.

Of course, the EPC can also be used as an autonomous control system without any other auxiliary components.

High performance correction functions such as static angle correction, selective angle correction for single outputs in running operation and speed-dependent adjustment of the programmed switching sections (dead time correction) are available for fast processing machines.

Dead time correction

This automatic dead time correction adjusts the time delay of the attached mechanical actors in dependence of the speed of the machine. It is adjustable and differently possible for individual switching outputs in three different modes of operation.

The necessary angle/distance lead is calculated automatically depending on the machine speed and is updated continuously during operation.

32 programs can be stored as standard within the EPC48 at a resolution of one degree (360 steps per revolution), 8 programs within the EPC16. They are selected by keyboard input or, in the case of EPC48, also at digital inputs.

Programs can be copied completely or in segments.

During operation the current angle, a converted unit of length, the machine speed in rpm and the switching status of the outputs are displayed.

Through the serial interface a data output during operation and the programming of the EPC is possible. Fully-integrated control/information systems right up to CIM processing can be realized in this way.

A watchdog output indicates fault-free operation. In addition numerous self-monitoring routines are integrated in the software so that maximum operational reliability is guaranteed.

The programming dialogue can be enabled or disabled by an optional key-operated switch connected externally.

Fault messages/input errors are displayed by clear text. Dialogue guidance is very simple and clear by the integrated LCD character indication.

PC-software

As an option, the PC software EPRPRO for WINDOWS will allow you to carry out programming with graphic support, save data, retrieve ongoing operating data, create program documentation, simulate and test dead times. You can download the free demo version from our website www.zander-aachen.de

Problem-free industrial application under adverse ambient conditions is also guaranteed by the DIN standard 144x144 mm control panel housing with splashproof keypad on the front.

If this is still not enough to meet your requirements or if extensions or modifications appear necessary for your particular application needs - just contact us. Thanks to our flexible overall concept with high capacity reserves, we will definitely be able to meet your special requirements.

1.1 Important Safety Warnings

The user manual contains all of the information that is necessary to properly install and put EPC control devices into operation. It is intended for qualified personnel familiar with the installation, commissioning or maintenance of the machine equipped with an EPC control device.

This user manual does not substitute the machine's operating instructions. This must provide separate coverage of the EPC functions used in the particular application and explain the effect these have on the machine.

Particular attention must be paid to the safety concept underlying the overall project. Supplementary safety precautions ensuring defined, safe operating statuses irrespective of the control and operating equipment must be taken in all areas where, in conjunction with automation components, faults are able to cause material damage or personal injury.

Pertinent accident prevention regulations must be observed. Emergency stop circuits to EN 60204 (VDE0133) must remain in effect in all operating modes and must not result in any undefined restart when released.

Reliable electrical isolation in the form of a transformer to VDE0551 must be provided when using 24VDC EPC control devices.

Apart from the measures described in this manual, no action must be carried out inside the device.

2 Structure

The whole unit is of modular design and is integrated in a control panel housing with DIN standard dimensions of 144x144mm.

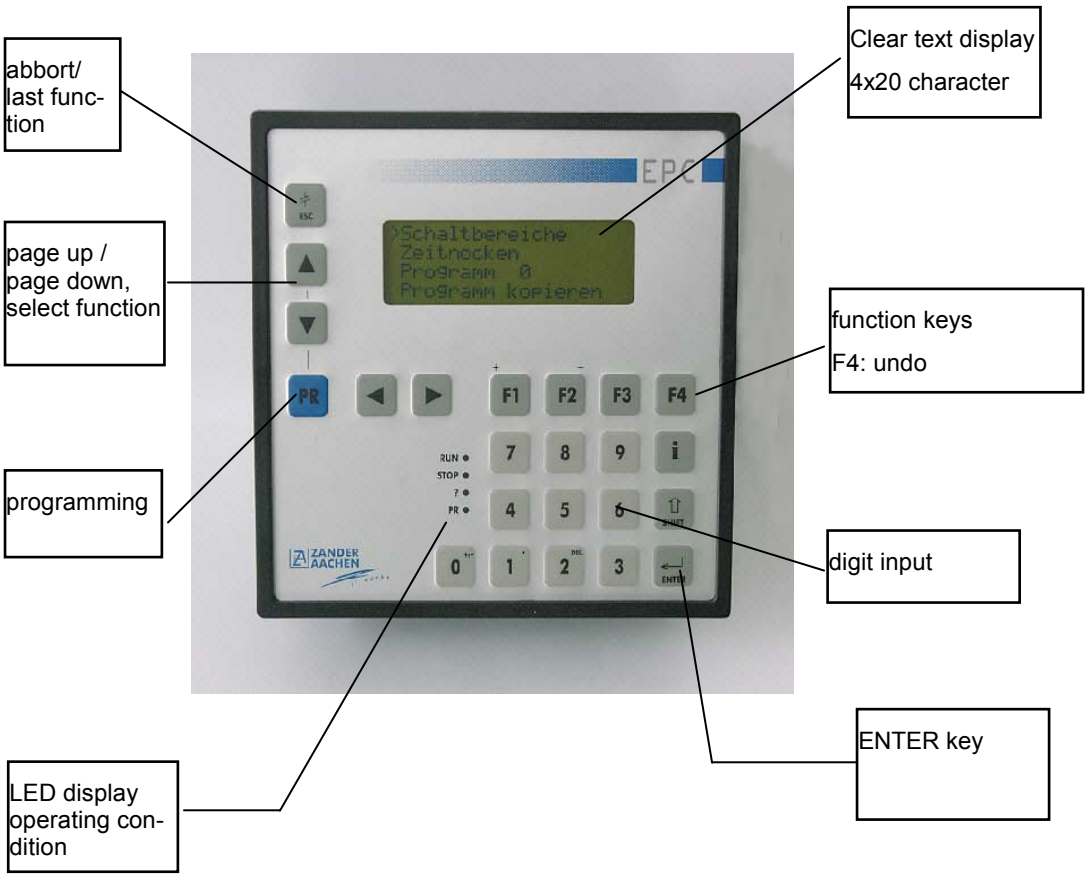

Figure 1: EPC front panel

The transparency keyboard and prompting are identical for all devices EPC16 and EPC48.

2.1 EPC16 Hardware

2.1.1 EPC16 Output-Cards

Interface cards (adapter cards) can be mounted at the rear and screw-fastened at the stud bolts provided. This affords a simple and cost-effective way of installing customer-specific output cards.

plug-in output cards

Available as standard:

- EPR16-RE, order no. 585450: card with 16 relay outputs 250VAC, 5A

The particular advantage is found in the fast and convenient manner of exchanging modules. Later customer-specific hardware alterations or extensions can be accomplished with ease. The adapter cards are simply fitted onto the OUTPUT plug of the EPC16 and fastened to the rear panel by means of 2 screws.

2.1.2 Internal Structure of EPC16

EPC16 possesses two stabilized internal power units:

- DC 5V voltage supply of entire electronics.
- second, of it independent DC 12V power unit for the supply of external shaft encoder.

This 12V power supply unit is electrically isolated for the units with 230VAC or 115VAC voltage supply, and electrically connected with the supply voltage for the 24VDC version. An isolating transformer must therefore be connected externally in front of units with 24VDC voltage supply.

Figure 2: Rear panel of EPC16 with connections

External key-operated switch

The optionally connectable key-operated switch is not integrated in the front panel in order to ensure the highest possible protection category.

An effective surge arrester and a mains filter for conditioning industrial power supplies carrying electrical interference are connected in front of the power supply unit. The EMC regulations according to the CE-declaration of conformity EN 50081-1/EN 500082-2 are met.

Lithium battery

A lithium battery for the backup of the RAM (program memory) is integrated. The lifetime of the lithium battery is about 10 years under normal ambient conditions. It is therefore usually not necessary to change it.

All inputs are electrically isolated and extremely insensitive to interference.

The microprocessor unit contains a 16-bit-V25 processor, clock generator, memory, interrupt controller and serial interface.

LCD display and keyboard form likewise a closed assembly group.

Interferences into the equipment are inadmissible.

Fuse

The mains fuse plug-in is on the equipment back directly beside the mains connection clamp. It may be exchanged only by an identical fuse.

2.2 EPC48 Hardware

The whole unit is of modular design. A slide-in module system bearing the various electronic PC boards is integrated in a control panel housing with DIN standard dimensions of 144x144mm.

All the PC boards can be removed from the back without dismantling the whole housing after loosening the relevant locking screws. The major advantage is in the fast, maintenance-friendly possibility for exchanging logically related modules. Later customer-specific hardware alterations or extensions can also be accomplished in this way.

All the PC boards are available as spare parts.

2.2.1 Power Supply Unit EPC48

This PC board contains the power supply unit as a complete unit for supplying the whole electronics (5 V), a second independent power supply unit for supplying external encoders (12V) and the connection for the optionally usable external key-operated switch.

The connection of the serial V.24 interface SERIAL (25-pol. SUB CD plug) is implemented on the CPU module. The plug at the power supply unit is functionless in the EPC48!

The key-operated switch is not integrated in the front panel in order to

ensure the greatest possible protection.

An effective surge arrester and a mains filter for conditioning industrial power supplies carrying electrical interference are connected in front of the mains transformers.

The power supply board also contains the lithium battery for emergency backup of the RAM (program memory). There is a second battery directly on the processor board so that exchanging the power supply board or the lithium battery on it does not lead to data loss (double battery backup). The lifetime of the lithium battery is about 10 years under normal ambient conditions. It is therefore usually not necessary to change it.

Fuses

The whole unit is protected by primary and secondary fuses plugged to the power supply board. These may only be replaced by fuses of the same type.

2.2.2 Inputs EPC48 (INPUT)

This module contains the input circuits for shaft encoders, external program switching and serial V24 interface.

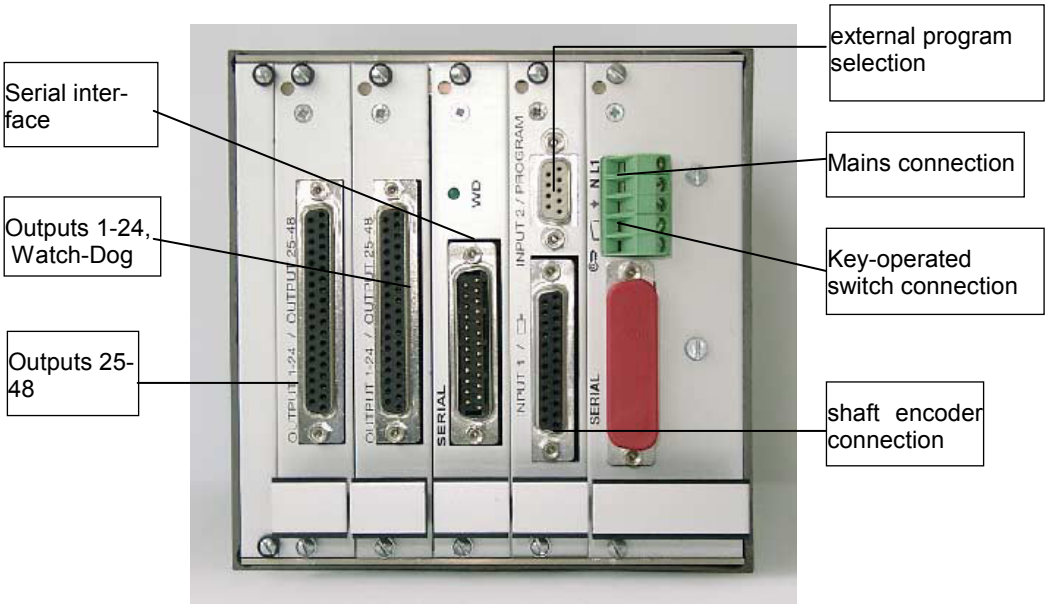

Figure 3: Rear panel of EPC48 with connections

2.2.3 CPU/MEM

Microprocessor board with 16-bit processor, clock generator, memory, interrupt controller and lithium battery. Thanks to the battery on the power supply board, removal of this PC board does not lead to a data loss, unless the memory ICs themselves are actually removed from their sockets.

2.2.4 Outputs

Two identical PC boards each with 24 transistor switching outputs isolated by optocouplers. A plug-in bridge on the PC board determines the selection of output 1-24 or output 25-48.

The EPC48 also operates with only one of these output cards.

3 Installation

See chapter 10 for pin assignments.

3.1 Mains Connection / References to the fault free operation

Check that the operating voltage and the PE conductor are connected correctly prior to initial operation.

The PE conductor connection is connected internally with the electrical shield and the mains filter. Safe earthing is therefore essential for fault-free operation.

The whole unit is protected by primary and secondary fuses plugged to the power supply board. These may only be replaced by fuses of the same type.

The inside of the housing is metal-lined and therefore well shielded against electrical interference.

Nevertheless, the following installation instructions must be observed to ensure fault-free operation:

- Good earthing with short connection and at least 1.5 mm^2 cable cross section.
- Use twisted pair, shielded cables with at least 0.25 mm^2 cross section for all data lines.

- Keep a minimum distance of 40 cm away from high voltage or high frequency devices on all sides of the EPC.
- Do not lay supply lines to the EPC together with high voltage or high frequency cables.
- Perfect, low voltage protective earthing of the machine to be controlled.
- All external contactors or relays equipped with anti-interference components, e.g. diodes, varistors, RC elements, etc.
- Lay digital signal inputs with shielded cables earthed on one side.
- Conductively connect metal housing of shaft encoder with protective earthing or mount on earthed metal flanges.

With bad mains voltages use the external noise-suppressor FN420, order-no 585998. Connect it directly before the main connections of the EPC16/EPC48. If all components keep the EMV regulations according to EN 50081-1/EN 500082-2, this procedure is not necessary.

3.2 Outputs

Exchangeable optocouplers

All the outputs are passive, i.e. the desired voltage is applied externally to connections 26-35 (+U). These contacts are internally connected on the PC board.

EPC48:

The transistor outputs switch a maximum 60 V/100 mA. They are not permanently short-circuit-proof. A brief surge voltage up to 200V does not cause destruction. The optocoupler concerned should be replaced, however, if a defect occurs. See chapter 2 for further details. A connection of the external 0V-Signals to the OUTPUT plug is not necessary (2-wire-connection).

EPC16:

The transistor outputs switch 10-30V/500mA. They are durable short-circuit proof and temperature rise-protected. The external 0V-Signal must be put on the clamp 17 (3-wire-connection).

Attention with EPC16:

Contacts 36 and 37 are only provided for supply voltage to any adapter cards used, they must not be connected.

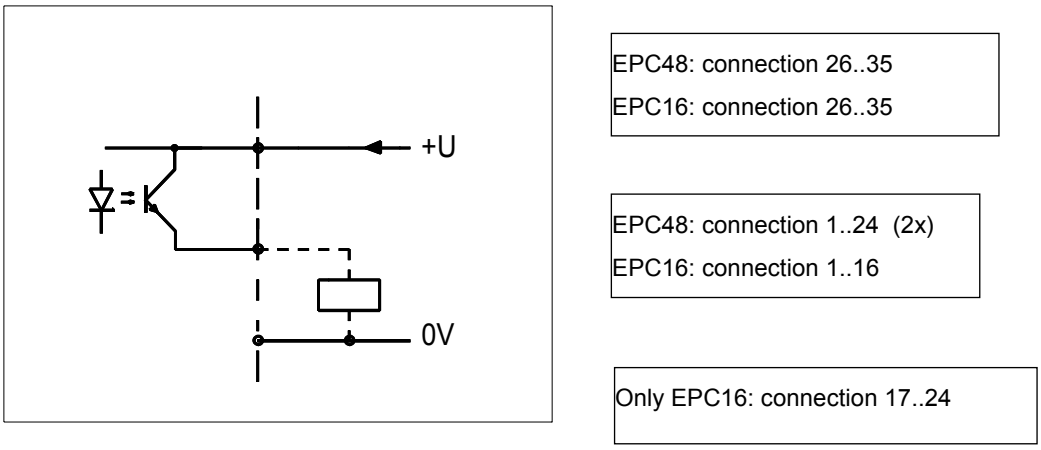

Figure 4: Transistor outputs EPC

All outputs can be connected directly to the inputs of series-connected PLCs without extra components as a rule.

If the switching performance is inadequate, you may equip

- EPC16 with the auxiliary relay cards
- provide EPC48 with output cards with 16 outputs at a switching capacity of 0.5A (permanently short-circuit-proof),
- or series-connect a ZANDER interface module adapted to load. Please ask for relevant documentation.

Production of customized output cards is possible thanks to the modular assembly.

3.2.1 Watchdog output

The watchdog output (connection 25) is normally switched on by the control and signals fault-free operation. The electrical data are identical with those of the other switching outputs. In EPC48 the watchdog output is only activated on output card 1-24. The watchdog output is loadable with max. 100mA. An active watchdog signal is used to show to a secondary PLC that the EPC16/EPC48 in a normal operating condition works actively.

3.3 Inputs

3.3.1 Shaft/Path Encoder Connection

A digital 10-bit optocoupler input serves to connect an absolute shaft encoder. EPC48 and EPC16BT have a binary input, EPC16GT has a Gray-Excess76 input.

The permissible input voltage range is 10-30V.

The 12V/250mA encoder supply is available at connections 13,25 (+12V) and 1,14 (0V).

The 0V-connection of the inputs is connected with the 0V of the internal electronic.

Only EPC16:

This internal 0V-connection can be separated for the use of an external voltage supply (DC 10..30V) for the signal input/shaft encoder by removing the link plug X2 (equipment back). In the case of use of the internal power supply unit the link plug X2 must be attached.

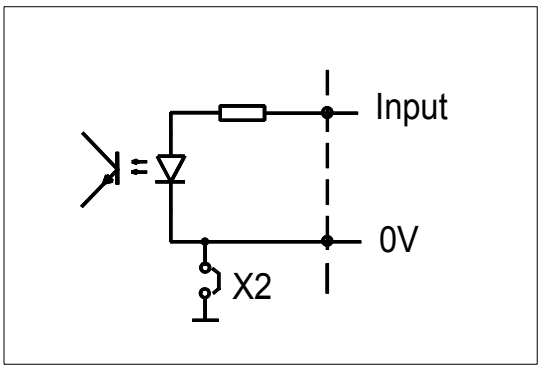

Only EPC16:
0V- plug-in bridge X2

Figure 5: Optocoupler Input EPC

The shaft encoders which we offer are connector-compatible and can be connected directly without an additional voltage supply.

Direction of rotation reversal:

The direction of rotation of the encoder connected can be altered by means of a plug-in bridge:

➪ On the back of EPC16 you will find **plug-in bridge X1** with which the direction of encoder rotation can be changed. Remove the plug-in jumper to reverse.

Changing direction of rotation

➪ On **EPC48** this plug-in bridge is marked **"A"** on the INPUT card. Remove the plug-in jumper to reverse.

The direction of rotation must adjusted in that way that a positive direction of rotation is indicated with normal operation of machine, otherwise no speed measurement and dead time compensation takes place.

Connection to the shaft encoder must be made with a shielded cable. We supply suitable connecting cables of the appropriate length.

Conductively connect metal housing of shaft encoder with protective earthing or mount on metal flanges to enhance interference immunity.

Refer to separate data sheet for information on our absolute shaft encoders. Suitable cable connections can be referred ready-made with ZANDER.

3.3.2 Key-operated Switch

Here too, the electronics is electrically isolated by an optocoupler so that remote switching via longer connecting cables poses no problem.

The key-operated switch (to be connected to contact 4-5, see Fig. 2 and 3) enables the "Programming" function. This can be omitted completely (control unit only) or replaced by a wire bridge (programming enabled at all times), depending on your requirements.

3.3.3 External Programming (EPC48 only)

The EPC48 has a 6-bit binary input for the external selection of different programs.

Hereby there is a direct allocation between the applied binary code and the program number. The program 7 is selected for example by logic "1" (voltage) at inputs Bit0, Bit1, Bit2 and logic "0" (no voltage) at inputs Bit3, Bit4, Bit5 (decimal 7 = 000111 binary).

The new program is accepted with the positive edge of the takeover signal at connection 6 without previous selection by a dialogue function.

A program change can therefore take place without manual actuation of keys.

The switchover time to the new program is about 2s after the takeover signal.

For safety reasons a programchange is only accepted during standstill. Since an extremely slow machine speed below 0.1 rpm is within the scope of the measuring resolution, a program switching is also enabled in this range.

All switching outputs of the new program are switched according to the current shaft encoder setting after program change (approx. 2s after takeover signal).

3.4 Serial Interface

The bidirectional V24 interface supports the signals TxD, RxD, CTS, RTS. Compliance with all electrical regulations in accordance with S232 is guaranteed.

Connection 1 is connected with the housing and the PE conductor connection. This is switched to the shield of the data line as a rule. Lay the shield to one of the two connected devices on one side.

the right cable

Use a twisted pair cable with total shielding as a data transmission cable. Here the signals RxD, TxD and RTS, CTS should be arranged respectively in twisted pairs (Order-No. 585732, 2.connection 25-pin or 585733, 2.connection 9-pin).

The internal electronics supply voltage is applied at connection 7 (0V) and 18 (+5V).

The electrically isolated encoder supply voltage is applied between connection 9 (+12V) and 10 (0V). It can be used as an additional supply to smaller external components if necessary. In this case the total load including encoder may not exceed 250 mA. This supply voltage is also required when our V24/TTY converter is connected.

No external voltage may be applied to the voltage bearing contacts 7, 18 and 9, 10!!!

The V24 interface is technically not suitable for transmissions over distances greater than approx. 15m. The 20mA line current interface (TTY) should be used for transmissions over long distances. You can order the appropriate converter, which is integrated in the connector, from us.

RS422/485 and TTY interfaces allows transmissions over distances up to several hundred metres. All ZANDER software products are equipped with transmission checks for additional transmission error recognition and elimination.

The following parameters are preset in the software:

9600 baud, 8 bits / EVEN PARITY / 1 stop bit.

The transmission speed and the transmission delay can be set to different values in the dialogue. The same parameters must be set on the connected device.

data telegram

The machine speed, the current angle and the program number can be output during operation. The data are requested by the machine terminal, PC or PLC with the telegram:

<stx>SW<cr>.

<stx>: start of text (code 02)

<cr> : end character (code 13)

The EPC16/EPC48 replies after the set transmission delay (see chapter 4.1.11 - INSTALL) with:

<stx>SWppwwwnnnn<cr>

pp: program number 00..31

www: angle 000..359

nnnn: speed in rpm 0000...9999

Continuous read-out in operation leads to a reduction in the maximum possible machine speed since the serial interface is read out interrupt-controlled! The requesting device unit should therefore request this information from the EPC only when necessary or within a fixed time schedule.

Extensive data transmission is possible at standstill by way of the "PC Communication" function (chap. 4.1.10). See the program descriptions of our software products for more information on the serial interface.

4 Programming

4.1 Programming with Internal Programming Unit

The EPC has an efficient programming unit with which you can compile even complex programs without any prior experience. You will be guided by the clear text display. Incorrect or illogical key combinations are not accepted.

```
> Switching Areas
  Timed Output
  program 13
  Copy program
```

Programming the various units takes place in the same structure. A system change or mixed use of our electronic program switching devices therefore poses no problem for the operator.

With the integrated programming unit you can:

- Compile new programs with new switching areas
- Simply change existing programs
- Display already input switching states (documentation)
- Delete whole programs or parts thereof
- Copy program sections or whole programs within the EPC
- Select different programs
- Input a speed-dependent dead time correction for individual outputs
- Define or modify parameters such as the transmission speed of the serial interface
- PC communication over the serial interface activate

- A test routine for the installation call
- Change language settings.

4.1.1 Keyboard

The keyboard has the following function:

- **Number keys 0..9**

to the input of numerical values, e.g. output **14**

- ***ENTER key (memory key)***

This key should be pressed at the end of every numeric input. Likewise over ENTER a function in the programming menu is selected.

- ***PR key (programming)***

Pressing this key switches the "Programming" mode on or off respectively. Precondition for switching on the "Programming" function is that **the key-operated switch contact is closed and the machine at a standstill.**

- **Key ▲ ▼ (*select function)***

Here you can select the desired function in the "Programming" mode. With each pressing one function moves forwards or backwards. The respective selected function is marked in the plain language by a placed in front " > ", e.g.. **> switching areas**

Outside the programming mode, you can use these two keys to step between the various display functions.

- **ESC key (abord/back*)***

This key switches back one logic stage from the current input. It is used for example to select another output after switching range inputs have been made for one output.

- **F4 key or DEL(Shift+2)**

entire last input deletes

- **Key ◀**

last entered indication deletes

- **i key (info)**

shows in certain operating conditions additional information / assistance on

By simple prompting over the integrated character indication you provide simply and fast the desired programs!

4.1.2 Start and End of Programming

To start the functions for programming, close the **key-operated switch (or connect the key-operated switch connections**) and press the **PR** key.

Attention!!!

Programming is only possible with the machine at a standstill when the speed of the angle encoder is 0 !

To quit programming, press the PR key a second time. **"please wait"** will appear on the display while the unit is processing its internal data. When you have finished programming do not forget to remove the key from the key-operated switch in order to prevent tampering.

4.1.3 Selecting a Dialogue Function, General

Once programming has been started, the display will show you the last dialogue function to be used with a „**>**“ in the first column marks. You can page forwards or backwards through the various functions using keys ▲ und ▼, with **ENTER** you select a function. All entries are only valid for the „**>Programm 4**“ program indicated, here thus for example program No.4.

Press **ENTER** to activate one of the functions indicated. The following chapters describe how to operate the various functions.

ENTER key

Changes made to settings and numerical values will only be confirmed after pressing the ENTER key! The **ESC** key will allow you to undo any changes entered before pressing the enter key.

The following dialogue functions can be selected after call by **the key** PR:

```
>Switching Areas
 Timed Output
 Program 13
 Copy Program
 Delete Program
 Deadtime
 Deadtime-Mode 1
 Factor 1.00
 Hytereses 0/0 U/min
 U-Minimal 0 U/min
 Correction Angle 0
 Outp.-Release   No
 PC-Communication
 Baudrate 9600Baud
 Senddelay 50ms
 Outputtest
 Encoder    360
 Language
 EPC48 Version V3.0
```

Depending upon attitude the indicated parameters can deviate from this list. In the programming mode the LED " PR " flashes.

Below the individual functions are specified.

4.1.4 Switching Areas

In this function, similarly as if adjusting the cam disks of mechanical cam control units, for each output of the program concerned the beginning and the end of a switching area are specified:

```
Output: 12      Prog: 0
 from  12 to  45
>from  60 to  ___
```

In the example the switching is entered between 12 (degrees) to 45

(degrees) for output 12, i.e. output 12 switches on with reaching the angle value and remains switched on up to and including angle 45.

Further switching areas for output 12 are specified in the following lines. With the keys ▲ and ▼ you select the desired line.

Edit with the keys ◀ (indications delete), **F4** / **SHIFT DEL** (delete whole last input) and **ENTER** (take over input). Also easily possible are changes in lines already entered or the deletion of individual switching areas (select output and press **F4).**

You select a new output with key **ESC.** If switching areas are already programmed for this output, these are indicated. A possible re-entry always takes place in the last line.

You leave the overall function " programming " by pressing of the key **PR .** After a short break ("please wait") you are again in the normal operation.

All inputs have only validity for the program indicated in the menu line **>program 4.**

As many as desired switching areas per output are possible! Of course also ranges over 0 degrees can be entered away, for example by 255 - 4 degrees.

Overlapping inputs are summarized automatically - from 12 (degrees) to 25 (degrees) and 20 (degrees) to 56 (degrees) becomes thus 12 (degrees) to 56 (degrees).

An invalid or too large input value is indicated by * at the concerning place.

On the basis of the plain language dialogue you always see, which input must be made, logically wrong inputs will not be accepted - it couldn´t have been made easier!

4.1.5 Timed Output

With the function **>timed output** you can specify a switching output with defined cyclic duration **for the last 8** switching outputs, i.e. for the outputs 41 to 48 at EPC48 and/or the outputs 8 to 16 at EPC16.

For this first one switching area of arbitrary length must be programmed with function **>switching areas** for the desired output. Through this you define the point of switching on for the time-dependent switching output. Subsequently, you select function **>timed output** and enter here the length of time starting from point of switch-on time:

```
 Output 41     50ms
 Output 44     80ms
>Output 48     ____
```

E.g. if output 41 from 55 degrees to 60 degrees is programmed and a time cam fixed at 50ms for output 41, this output always switches on at the angle of 55 degrees and remains switched on for exactly 50ms, independent of the machine speed. The programmed point of switching off (here 60 degrees) is without meaning!

NOTE: The cam controller must work in positive direction of rotation, otherwise change over the direction of rotation as described in chapter "Shaft/Path Encoder Connection".

The setting can take place with an accuracy off 10ms. A possibly specified dead time compensation for this output is also effective with timed outputs.

If several switching areas for an output are programmed one behind the other, each has the same length of time.

4.1.6 Program Selection

All the previous functions were related, as already mentioned, to the currently selected program.

EPC48 can process up to a maximum of 32 programs (program No. 0 to 31) independently without restriction, EPC16 a maximum of 8 programs (program nos. 0 to 7) .

You can quit the current program and call a new program with the function **>Program** - program selection function.

Then you can select another program, e.g. program **6**. Then press the Program "enter" key, the new program 6 is set.

After quitting this function and returning to the normal mode, the outputs are switched immediately according to the new program and current angle setting!

4.1.7 Copy Program

Several similar programs differing only in a few parts are often required.

The **>Copy Program** function saves a lot of time here by being able to copy programmed switching ranges or complete programs at will. Program sections can be copied to any other position within the same program or into another program.

For example, the program segment 10 degrees to 52 degrees is to be copied from program 5 to program 23, starting at angle 112 degrees: For this you give program after selection **>Copy Program** the following:

```
from  10  to   52
to Program  23
from Angle  112
```

Note that the "Copy" function is not restricted in any way.

Enter angle 1-0 to copy a complete program.

It is also possible to copy a program segment, e.g. 10-25 degrees within the same program, e.g. starting at angle 12 degrees. In this case simply an offset of a mere 2 degrees is the result for the selected range.

Another possibility is to compile subroutines once which can then be copied at the respective point in the current program - which simplifies the work considerably.

4.1.8 Delete Program

Select the **>Delete Program** function with the keys ▲ ▼.

After pressing the "enter" key, the question "Delete Progr ?" appears for confirmation. If the "enter" key is then pressed, all programmed switching ranges of the displayed current program are deleted; the function can be aborted without processing with the **"ESC“** key.

4.1.9 Deadtime (Delay-time compensation)

Depending on the dead time mode selected, the function

>deadtime

will enable you to define the dead times (Delay-time compensation) for switching an output on and for switching an output off. If necessary, you should first set the desired dead time mode in the ">**Deadtime-Model"** function; also see next chapter.

Fo the dead time compensation it is absolutely necessary to read the chapter " Dead Time Correction "

<u>Deadtime-Mode 0, 1 oder 2</u>

In the dead time mode 0, 1 or 2 the program display will show the following after choice of the function **>Deadtime**:

```
Output:   15      Prog:0
Deadtime:  45ms
```

Enter the (new) dead time for the concerned output absolutely in milliseconds. Inputs of 1 to 999 milliseconds are possible.

After confirming the input by pressing the **"enter"** key, "Output: __" will reappear. You can enter the desired dead time for the next output.

A description of the various dead time modes is provided in chapter „Dead Time Correction“

Deadtime-Mode 3

In the dead time mode 3 different dead times for switching an output on and switching an output off are possible. Therefore the display will show:

```
Output:   15      Prog:0
Deadt.R/F  134/245 ms
```

R/F means Rising edge / Falling edge. First you enter the value of the dead time for the rising edge (point of switching on, here 134ms) then the value for the falling edge (point of switching off, here 245ms).

After confirming the input by pressing the **"enter"** key "Output: __" will reappear; you can enter the desired dead time for the next output.

Since the dead time correction compensates the mechanical delay times of the connected actuators, **the fixed dead times are automatically valid for all programs!**

4.1.10 Dead time correction mode

Select the **>Deadtime-Mode** function with the keys ▲ ▼.

After pressing the "enter" key, you can select a new Deadtime-Mode (0,1,2,3) with the keys ▲ ▼. Then press the Program "enter" key, the new Mode is set.

You will find a description of the various dead time modes in chapter „Dead Time Correction“

4.1.11 Conversion factor for the displayed value

Factor

With this factor, the current angle value in the clear text display is multiplied during operation and can be displayed additionally.

Select

>Factor 1.00

with the "enter" key. Enter here the desired conversion factor between 0.01 and 99.99. The input takes place with four digits without decimal point. The decimal point is set automatically after 2 digits.

The factor is used for converting angle values to the corresponding units of length (m, mm, inch ..).

4.1.12 Hysteresis

Hysteresis

This function is used to define the hysteresis range as well as the hysteresis speed to suppress the switching of outputs by vibration if the machine idles.

Select the function

> Hysteresis 0 / 0 rpm (U/min)

by the " ENTER" key. You may enter a value between 0 and 9 degrees for the hysteresis range as **the first** parameter (the hysteresis function is not operative at 0). If necessary delete the last value with F4-key.

Press "enter" to confirm the value selected. The cursor jumps to the second place to make an input for the hysteresis speed. The hysteresis function is only operative at speeds below the hysteresis speed.

Alter the hysteresis speed between 0 and 9 rpm and press "enter" to confirm the value selected (the hysteresis function is not operative at 0 rpm).

An input **> hysteresis 3 / 8** rpm for example has the result that changes of the status of the switching outputs below 8 rpm take place starting with a difference of angle of at least 3 degrees - independently of possibly programmed switching values.

4.1.13 U-Minimal / Minimum rpm

U-Minimal

This function is used for defining a minimum speed below which the outputs are switched off irrespective of the angle encoder value and programming (also see Chapter "Technical Details, Minimum rpm").

After pressing

>U-Minimal

"enter" to call the function, you may enter a value between 0 and 9 rpm (the function is not operative at 0 rpm). Press "enter" to confirm the value selected. If necessary delete the last value with F4-key.

4.1.14 Angle Correction Whole Program

The accurate synchronization between the electrical control and the mechanical drive is a constant problem in mechanically synchronized control systems.

In the EPC therefore it is possible to input a correction angle at standstill or during operation which shifts the whole program by a certain amount. The allocation of the switching points to each other is not affected by this.

This function saves mechanical readjustment between the shaft encoder and the drive shaft.

The correction angle is valid equally for all programs.

Select the function

> Correction Angle __

by the " ENTER" key.

The value specified here is added to the value of the rotation shaft encoder as a constant factor. An input of **>Correction Angle 12** (degrees) is thus equivalent to a correction of the shaft encoder of 12 de-

grees in positive direction. Values to 359 can be entered with a dissolution of 360 steps/revolution and/or 999 with 1000 steps/revolution.

As described in chapters „Dynamic Corrections“, an adjustment is possible also while the machine is running.

4.1.15 Release of the outputs for the correction during operation

As described in chapters „Dynamic Corrections", the switching areas of individual outputs can be changed also while the machine is running. Normally this is possible only with closed key-operated switch. For the outputs which are fixed by the function

> Outp.-Release No

an adjustment **without** closed key-operated switch is possible.

Select the function **> Outp.-Release No** with ENTER key and with the help of the keys ▲ ▼ select Yes/No. With "No" (pre-setting) no output without closed key-operated switch can be adjusted during operation.

With „Yes“ the display will show:

```
Outp.-Release   Yes
from Output  12
to Output  16
```

You select the output section which may be adjusted. In the example thus the output 12 up to and including output 16 without closed key-operated switch are approved for adjustment during running of the machine. With closed key-operated switch the correction of **all** outputs is possible, the function **> Outp.-Release No** is irrelevant then.

4.1.16 PC-Communication

The next selectable function to appear is:

>PC-Communication

- communication with Personal Computer (PC) via the serial interface SERIAL. Only the serial interface on the CPU/MEM-board is activated.

This function only matters if our data transmission programs are used at the same time (see chap. 4.2).

If this function is selected the dialogue exchange funktion at the EPC is activated by pressing "enter". Provided that the right transmission speeds are available, dialogue with the PC is now possible; this is confirmed by the display "PC comm activ"

This function is disabled by pressing the ENTER key or the ESC-key.

4.1.17 Baudrate - Transmission speed of the serial interface

Baudrate

For the function „PC connection" it is necessary that the PC and the EPC have identically adjusted interface parameter.

Select

>Baudrate 9600 Baud

function, press "enter" key. The current baudrate is indicated on the display. The value 9600 baud is preset. Select another transmission speed if necessary with the keys ▲ ▼. The serial interface is set further as follows:

8 bits / EVEN PARITY / 1 stop bit.

4.1.18 Transmission delay of the serial interface

Senddelay

In addition to the baudrate a transmission delay between 0 and 990 ms can be set.

The EPC sends back a reply telegram for every received line within the scope of the telegram communication to the PC/PLC. The data traffic on the serial interface can thus be checked by the connected computer. To ensure safe data communication even with slow systems, the pause until the EPC48 replies can be altered between the above mentioned values. This is particularly significant when connecting slow PCs, PLCs or self-compiled, non-speed-optimized communication software. The still supportable delay value can be determined quickly by trial, for example by transmitting data within the ***EPRPRO for Windows*** Software. Faster PC systems operate with a delay of 0 ms without any problem.

The transmission delay is set absolutely in milliseconds.

Select

>Senddelay 50ms

with the ENTER-Key and change over the numerical keyboard in steps of 10ms.

4.1.19 Test Mode - Outputs

The function

>Outputtest

allows you to switch individual outputs on and off at the pressing of a key. This provides a valuable aid during the set-up process since each actuator can be activated independently of the overall control system.

After calling this function the display shows

```
Out      01-10 ----------
>32      11-20 ----------
         21-30 ----------
         31-40 ----------
```

enter the desired output with the keys ▲,▼ and ◀, ▶.

This will be switched on by pressing the ENTER key and then off again by pressing ENTER a second time. This process may be repeated any number of times. Also several outputs can be activated at the same time. Pressing the ESC-key will quit this function.

4.1.20 Resolution of the Encoder

With the function

> encoder 360

you may change the resolution of the encoder, 0-359 degrees (360 increments) or 0-999 degrees (1000 increments). This is made by the keys ▲and ▼.

The value must absolutely correspond to the attached encoder, since the normal function of numerous adjustments e.g. a correct dead time compensation depends on this. A maladjustment can lead to undefined switching.

4.1.21 Language of dialog

With the help of the function

> language

the dialogue of the LCD display can be adjusted to the languages **German, English, French and to Italian**. The setting is made by the keys ▲ and ▼.

4.1.22 Version display

This function displays the unit type along with the version number of the equipment software installed, e.g. "

>EPC48 Version V3.0

This function provides no other capabilities. Indicate this version-No for further inquiries please.

4.2 Programming by Personal Computer

Since the EPC has a serial interface, it is possible to program it using an PC or PLC.

ZANDER offers the highly efficient ***EPRPRO for WINDOWS*** PC-Software as an option. A demo version can be loaded from our home-page **www.zander-aachen.de** free of charge.

This PC-Software provides the capability of programming with graphic support, saving data, displaying ongoing process data, program documentation, dead time simulation ...

Please ask for further details.

5 Dynamic corrections

Dynamic corrections are to be understood as the alteration of set program values during operation.

These corrections are only possible with the key-operated switch closed too!

Exception: certain outputs are explicitly selected, see chapter „Release of the outputs for the correction during operation")

The function is called during operation as you press the keys **F1 and F2 simultaneously** . The following dialogue appears:

```
>Correction Angle   4
 Shift Areas
 Deadtime
```

The individual functions are described below. Quit the Dynamic-Correction function by pressing the PR-key.

5.1 Angle correction for the whole Program

The accurate synchronization between the electrical control and the mechanical drive is a constant problem in mechanically synchronized control systems.

At the EPC therefore it is possible to input a correction angle at standstill or during operation which shifts the whole program by a certain amount. The allocation of the switching points to each other is not affected by this. This function saves mechanical readjustment between the shaft encoder and the drive shaft.

A correction angle is entered as follows:

Select the function

>Correction Angle 0

and press the ENTER-Key. Every time ▲ and ▼ is pressed the whole program is set forwards or backwards by one degree either during operation or at standstill. **Confirmation with the "enter" key is not necessary, adjustment takes place directly by pressing ▲ and ▼.**

Quit the correction function by pressing ESC or ENTER.

For safety reasons this correction can only be done degree by degree. However, by repeated pressing of the correction keys any correction angle between 0 and 359 degrees is possible. The respective set angle is displayed, whereby the correction angle is always displayed positively, i.e. -2 degrees are equivalent to a correction angle of +358 degrees.

5.2 Correction of programmed switching areas

This function is used for shifting programmed switching ranges of a selected output. This shift may apply to both the leading and trailing edges of a switching range or only to the leading edge or only to the

trailing edge of a switching range. Please note that this shift affects all switching ranges of an output.

The correction remains constant after quitting the function.

It is entered as follows. The function

> Shift Areas

can be activated **also without closed key-operated switch, if you released at least one output before,** see chapter „Release of outputs for the correction during operation“. Then however **only those explicitly approved outputs are accessible**

```
Output:  12    Prog: 0
Rising Edge?  Yes
Falling Edge?  No
Shiftvalue      +  0
```

- Enter the desired output, 12 for example, confirm with the ENTER-key.
- The display „Rising Edge“ - leading edge appears, adjust leading edge(s) of the programmed switching segments
- Press ▲ und ▼ to select **YES** - leading edge adjustment is desired, **No** if not
- The display „Falling Edge“ appears, adjust trailing edge(s) of the programmed switching segments with ▲ and ▼ (Yes or No)

If the answer to both questions is positive, the leading and trailing edge, i.e. the whole switching range of the output concerned, will be adjusted.

- The display „**Shiftvalue: + 0**“ appears
- Every time ▲ and ▼ is pressed, all leading edges and/or trailing edges of the switching range of output 12 are set forwards or backwards by one degree either during operation or at standstill. This is displayed accordingly.

Confirmation with the "enter" key is not necessary, adjustment takes place directly by pressing the keys ▲ or ▼.

The set correction values are only valid within the current function display. They are taken over automatically into the current switching ranges so that the setting "+0" always begins.

Quit the correction function by pressing **ESC** whereupon you may then enter a new output. Pressing **PR** again will return you to normal operation.

This adjustment is speed-independent unlike the dead time correction!

If only the leading or the trailing edge is adjusted, a correction is only enabled to the extent that no switching range is totally deleted or moves to an adjacent programmed range.

5.3 Dead Time Correction during operation

This speed-dependent adjustment of individual outputs has already been described in detail in chapter „Technical Details“.

Select the function

>Deadtime

and enter the desired output, 12 for example. If dead time mode 1 or 2 is adjusted, the display will show

```
Output:  12   Prog: 0
Deadtime:  0ms
```

You may change the deadtime by the keys ▲ and ▼, for safety reasons the value is set forwards or backwards by 1ms. A continuous pressure lets the adjustment keep running automatically (Autorepeat).

Confirmation with the "enter" key is not necessary, adjustment takes place directly by pressing the keys ▲ or ▼.

In the dead time mode 3 different dead times for switching an output on and switching an output off are possible. Therefore the display will show:

```
Output:  12   Prog: 0
Deadt.  R/F  14 / 23 ms
```

R/F means Rising edge / Falling edge. First you may change the value of the dead time for the rising edge (point of switching on) then the value for the falling edge (point of switching off). Use the keys ▲ and ▼ to change the value and ENTER to select the falling edge.

Quit the correction function by pressing **ESC** whereupon you may then enter a new output. Pressing **PR** again will return you to normal operation.

6 Text Display in Normal Operation

The following displays can be called during operation:

- The current angle setting (Angle) in degrees
- The angle multiplied by a factor (x). This factor can be set between 0.01 and 99.99 in the installation program (chap. 4). The display is always an integer. Conversion has no influence on programmed switching ranges. You can therefore read off positions converted according to your machine directly, e.g. in m, cm, mm, inches, etc.
- The machine speed in rpm (U/min), rps (U/s), rph (U/h)
- The correction angle in degrees
- The control state of individual outputs
- The program-No.

```
130 Deg        12 U/m
260 x          24 x/m
   5 Corr.-Angle
                   Pr. 0
```

The display is switched over by pressing the keys ▲ and ▼ during operation.

```
Out 11-20 ____■__■_____
    21-30 __■■__■_____
    31-40 _■■__■__■■
130 Deg            Pr 0
```

The position of the key-operated switch has no significance here.

7 Error Messages

Numerous software-controlled measures for error monitoring are standard equipment and offer added security.

In fault-free processor operation the watchdog output is activated (internal processor self-monitoring). This signal can be processed further by subsequent controls.

Exceeding of the maximum permissible speed is detected and displayed by an asterisk "*". In this case the functions of the EPC are retained with top priority "Switch outputs", whereby individual angle values are omitted as a result since the time for switching the outputs at every degree of the shaft encoder is no longer sufficient due to exceeding of the speed; i.e. the resolution of one degree no longer exists. The reaction time of the device to keystrokes also increases. Nevertheless exceeding the speed does not lead to undefined switching/function behaviour.

Since speed monitoring takes place by direct angle comparison at the last processed value, orderly operation of the connected shaft encoder is checked here simultaneously.

Memory test

On applying the mains voltage, a **memory test** is carried out automatically which detects errors in the stored programs with high reliability.

Such an error may occur for example when a RAM (memory component) is removed or defective. If the system detects such a table error, **"Error!!!" (Fehler!!!)** will flash in the display; the outputs remain switched off. All switching ranges and dead times will remain cleared and all data will be set to standard values. The "Programming" function must then be selected (PR key and key-operated switch). It is advisable to check all data ("Documentation") and correct them where necessary.

Safest procedure is a download of all data with the help of the PC software ***EPRPRO for Windows***

The question : "Data ok??" (Daten ok??) appears at the end of the dialogue (PR key). On confirming with the "enter" key you return (with or without error correction) to the normal mode, on pressing key "N" the EPC waits with flashing display "Error!!!" (Fehler!!!) for new selection of the programming mode.

All dialogue inputs are checked for invalid or illogical values and the user is requested to repeat the input.

8 Technical Details

8.1 Switching Ranges

„Switching range“ or „Switching areas“ is defined as a contiguous angle range in which an output is switched, the output being switched off in the other angle ranges. A switching range is described by a "from angle" and a "to angle". The output is switched on at the from-angle. It remains switched on up to and including the to-angle and is only switched off **after** the to-angle.

A maximum of 180 (resolution 360 increment/degrees) or 500 (resolution 1000 increment/degrees) switching ranges may be defined per output if you define each switching range as exactly one degree (e.g. a "clock track").

Examples: Given a switching range of 10 - 20 degrees the output will be switched on at 10 degrees. It will still remain switched on at the 20 degree angle and will only be switched off as soon as the 21 degree angle is reached. --With a switching range of 1-1 angle, the output will be switched on at the 1 degree angle and switched off at the 2 degree angle. This means that the output will remain switched on for the length of 1 degree.

8.2 Speed measurement

The current speed of rotation (machine speed) is calculated by counting the incoming shaft encoder pulses during a defined measurement period. The unit calculates a "direct speed" and at the same time also an "average speed".

The direction of rotation must be so adjusted that with normal operation of machine a positive direction of rotation is indicated, see chapter 3.

8.2.1 Direct Speed

The period for measuring direct speed is 100 ms in a steady-state condition (relatively uniform speed). If the speed changes by at least 25 rpm, the measurement period will be reduced temporarily to 20 ms thus enabling the device to respond as quickly as possible in terms of dead time correction. If the speed change falls below 25 rpm again, the measurement period will be returned to the 100 ms measurement period in steps of 20 ms.

This "dynamic" measurement period produces a good compromise

- between a relatively accurate measurement over a long measurement period of 100 ms and
- between a rapid response time of the unit to large changes in speed.

Direct speed is used for all internal functions:

- dead time correction
- hysteresis
- deactivation of outputs at speeds < minimum rpm

8.2.2 Average Speed

The period for measuring average speed is 1000 ms. This is used only for displaying the current speed.

8.3 Dead Time Correction

This is one of the most powerful and comfortable functions which the EPC has to offer.

Electromechanical actuators such as solenoid valves are usually switched through the outputs of a program switching device, partly with PLC interconnected.

The dead time of these actuators, i.e. the time between electrical excitement and mechanical reaction, poses a major problem especially on fast processing machines such as packing machines because this reaction time leads accordingly to speed-dependent shifts.

In machines operating with constant speed this dead time can be corrected during operation by shifting the outputs accordingly.

At different machine speeds and when starting up/braking, these switching inaccuracies cannot be eliminated in this way since a speed-dependent presetting of the output triggering is now necessary.

With the aid of the "dead time correction" function, it is possible to enter the mechanical dead time of the connected actuator for every output.

During operation the individual switching outputs programmed with a dead time input are preset automatically, speed-dependently and independently of each other so that the mechanical reaction on the machine corresponds exactly to the programmed angle.

The dead time input may be different for every output!!!

The shift V (in degrees of angle) of the switching points is calculated as follows:

V[degree] **= dead time**[ms] **x speed**[rpm] **x 6 / 1000**

At a dead time of 10 ms for example, and a speed of 200 rpm, the original switch-on point of 100 degrees must be shifted by 12 degrees to 88 degrees.

An additional, static, i.e. speed-independent angle correction is possible during operation even after the dead time input.

The dead time input for individual outputs does not lead to a reduction in the maximum possible machine speed but the reaction time of the dynamic presetting drops with the number of input dead times.

Caution!!!

A dead time correction always takes place towards smaller angle values, i.e. in normal mode there must be a positive direction of rotation. The direction of rotation can be reversed if required by a plug-in bridge (see chapter 3).

You can preselect 4 different dynamic reactions in the automatic dead time correction with the "INSTALL" function:

8.3.1 MODE0

No dead time correction will take place even if dead times are programmed for various outputs. This mode provides a convenient means of, for example, conducting tests without dead time correction even if you have programmed dead times for outputs (otherwise you would have to set these to 0 for such a test).

8.3.2 MODE1

abrupt *correction*

During operation the individual output is preset speed-dependently according to the entered dead time, whereby the angle is preset "abruptly" to the new value in the event of a change in speed. The programmed dead time applies equally to the output's switch-on point as well as to its switch-off point (also see MODE3 for different dead times).

In the case of great changes in speed in conjunction with long dead times the automatic presetting can lead to correspondingly great correction values which are activated immediately and may result in short switching segments being jumped at the time of the correction. This may lead to undefined switching behaviour. So, when using MODE1, always check whether sudden fluctuations in speed may occur which would generate an angle correction as far as a preceding switching range within a measuring interval at the defined dead times.

The advantage of this setting is the short reaction time.

8.3.3 MODE2

smooth correction

In the same way as MODE1, this mode uses identical dead times for switching an output on and off. The dynamic correction during operation takes place degree by degree until reaching the necessary lead. This gives a "smooth" dead time correction which ensures that no programmed switching values are jumped due to large angle corrections. The reaction time up to reaching the calculated angle offset is accordingly greater.

MODE2 is preset.

8.3.4 MODE3

This mode allows you to enter different dead times for the output switch-on delay and switch-off delay. Operation in MODE3 is otherwise similar to that in MODE1, i.e. dead time correction responds very quickly to changes in speed.

8.4 Hysteresis Range, Hysteresis Speed

Vibration

In specific applications, switching ranges are defined directly after the idle point or directly before this idle point. If the machine is at this idle point and vibrations occur around this idle point, angle ranges may be achieved in which these outputs are activated.

In order to suppress undesired switching processes it is possible to program a hysteresis range in conjunction with a hysteresis speed. This function is used to define the hysteresis function as well as the hysteresis speed in order to prevent vibrations from switching outputs when a machine is at a standstill.

8.5 Minimum Speed (U-Minimal)

In order to prevent undesired switching processes when a machine is slowing down, i.e. at low shaft encoder speeds, you are able to define a minimum speed Minimum rpm.

Switching off outputs at standstill

If the current speed is less than the minimum speed, all outputs will be switched off irrespective of any switching ranges programmed. Only when the current speed reaches or exceeds the minimum speed the outputs will be switched to their programmed state.

Note: The outputs are switched off and switched back on again in relation to the directly measured speed and not the displayed average value. If the directly measured speed falls below the Minimum rpm value, it will be set internally to 0 so that dead time shifts are also cancelled internally.

9 Extensions / Special Versions

EPC-series control devices are used in a wide range of applications. This makes the adaptability of hardware/software particularly important.

To enhance the switching capacity of the output contacts, plug-in interface modules are available for the EPC16 units. EPC48 can be equipped with higher-capacity output cards, also see chapter 3.

The flexible, modular design enables customer-specific modification/extension requests to be realised for both hardware and software.

The EPC grows with your requirements!!

10 Conn. Pin Assignment

Outputs EPC16 (OUTPUT)

37-pin Sub-D socket

Pin	Signal
1	output 1
2	output 2
3	output 3
4	output 4
5	output 5
6	output 6
7	output 7
8	output 8
9	output 9
10	output 10
11	output 11
12	output 12
13	output 13
14	output 14
15	output 15
16	output 16
17	0V
18	0V
19	0V
20	0V
21	0V
22	0V
23	0V
24	0V (U2) for adapter card only
25	watchdog
26	+U (input)
27	+U (up to 36 internally connected)
28	+U
29	+U
30	+U
31	+U
32	+U
33	+U
34	+U
35	+U
36	+U
37	+U (+12V output for adapter card)

-

Outputs EPC48 (OUTPUT)

37-pin Sub-D socket

Pin	Signal
1	output 1 (25)
2	output 2 (26)
3	output 3 (27)
4	output 4 (28)
5	output 5 (29)
6	output 6 (30)
7	output 7 (31)
8	output 8 (32)
9	output 9 (33)
10	output 10 (34)
11	output 11 (35)
12	output 12 (36)
13	output 13 (37)
14	output 14 (38)
15	output 15 (39)
16	output 16 (40)
17	output 17 (41)
18	output 18 (42)
19	output 19 (43)
20	output 20 (44)
21	output 21 (45)
22	output 22 (46)
23	output 23 (47)
24	output 24 (48)
25	watchdog
26	+U (input)
27	+U (up to 37 internally connected)
28	+U
29	+U
30	+U
31	+U
32	+U
33	+U
34	+U
35	+U
36	+U
37	+U

Input Shaft Encoder (INPUT)

25-pin Sub-D socket

Pin	Signal
1	0V
2	Bit 0 (2^0)
3	Bit 2
4	Bit 4
5	Bit 6
6	Bit 8
7	(Bit 10)
8	
9	
10	forward/back
11	
12	
13	+12V (output)
14	0V
15	Bit 1
16	Bit 3
17	Bit 5
18	Bit 7
19	(Bit 9)
20	(Bit 11)
21	
22	
23	
24	
25	+12 (output)

Connections 1 and 14 as well as 13 and 25 are internally connected.

Input program change (EPC48 only)

9-pin Sub-D socket

Pin	Signal
1	Bit 0 (2^0)
2	Bit 1
3	Bit 2
4	Bit 3
5	Bit 4
6	takeover
7	
8	0V (only if plug-in bridge "B" plug-ged)
9	+12V (output)

Serial Interface (SERIAL)

25-pin Sub-D plug

Pin	Signal
1	shield
2	TxD
3	RxD
4	RTS
5	CTS
6	
7	0V (GND)
8	
9	+12V (U2) encoder supply outp
10	0V (U2) „ „
11	
12	
13	
14	
15	
16	
17	
18	+5V (output)
19	
20	DTR
21	
22	
23	
24	
25	

Mains connection

5-pin screw terminal

Pin	Signal
1 (L1)	230V AC or 115V AC / 24VDC *)
2 (N)	0V AC/DC
3	PE conductor
4	key-operated switch
5	key-operated switch

***) Always observe operating voltage on type plate!**

Connection cable - shaft Encoder EPR-WG

25-pin Sub-D connector

Pin	Signal	Wire colour**)
1	0V	blue
2	Bit 0 (2^0)	brown
3	Bit 2	black
4	Bit 4	white
5	Bit 6	violet
6	Bit 8 (2^8)	yellow
7		
8		
9		
10	forward/back	grey/pink
11		
12		
13	+10..24V	red
14	0V	blue
15	Bit 1	green
16	Bit 3	grey
17	Bit 5	pink
18	Bit 7	red/blue
19		
20		
21		
22		
23		
24		
25	+10..24V	red
	PE (housing)	shield

<u>Unused connector contacts may not be wired!</u>

****) colour of connection cable supplied by us**

11 Technical Data

11.1.1 Installation

Operating voltage: 230VAC/115VAC
EPC16 also DC24V
Mains frequency AC: 50-60Hz
Residual ripple < 5%
Temperature range: 0 - +40 0C
Protection class: IP65 on front
Installation position: any

EPC16:
Power consumption: approx. 10VA/20W
Weight: approx. 1400g
EPC48:
Power consumption: approx. 20VA/30W
Weight: approx. 3000g

11.1.2 Angle/path encoder connection

Resolution: 10-bit binary input
9-bit graycode input
electrically isolated
integr. power supply: 12VDC, 250mA
electrically isolated

EPC16:
Input frequency: approx. 3500Hz max.
500 rpm at 360 steps/revolution
EPC48:
Input frequency: approx. 7000Hz max.
1000 rpm at 360 steps/revolution

11.1.3 Outputs

EPC16
16 transistor outputs
10-30VDC, 500mA, short-circuit proof
EPC48:
48 transistor outputs
10-60VDC, 100mA
positive switching
electrically isolated by optocouplers
37-pin SUB-D connector on rear
positive switching
electrically isolated by optocouplers
37-pin SUB-D connector on rear11.1.4

11.1.4 Input program change (EPC48 only)

6 bit binary input, 1 takeover signal
input voltage 10-30VDC electrically isolated

11.1.5 Serial interface

V24, RS232 level, 300-9600 baud
8 data bits, 1 stop bit

11.1.6 Processor system

16-bit CMOS processor system
with battery backup, zero-voltage-safe

11.1.7 Display

LCD display, 4x20 character
all ASCII characters, special characters
symbol height 5 mm
readable up to about 2m away

11.1.8 Self-monitoring

Watchdog with switching output
Memory check
Transmission check serial interface
Shaft encoder check for illegal data
Speed exceeded

11.1.9 Shaft encoder EPR-WG2 / EPR -WG3

EPR-WG2 gray code: Order No. 585480
EPR-WG3 binary code: Order No. 585482
Resolution: 1 degree, 0-359
Voltage: 10-24 VDC
Consumption: 200mA
Outputs: 20mA, short-circuit-proof

Protection: IP65
Temperature: 0 - 55 °C
Weight: 500p
Vibration: 100m/s^2 (10-10000Hz)
Connection: Plug connector IP65
Cable length: 3m, 5m, 10m (optional)

11.1.10 Accessories

EPR16-RE:
Plug-in card with 16 relay outputs for EPC16, 3A/250V each
Order no. 585450

EPR-OUTPUT16:
Plug-in card with 16 short-circuit-proof transistor outputs for EPC48, 0.5A / 10-30VDC each

PC software EPRPRO for Windows:
PC program for programming, transmitting data, simulation, documentation
Order no. 585716

Cable for serial interface
2m, 2x Sub-D socket 25-pin
Order No. 585732

Cable for serial interface
2m, 1x Sub-D socket 25-pin
1x Sub-D socket 9-pin
Order No. 585733

Shaft encoder EPR-WG2 graycode absolute
Resolution 1 degree for EPC16**G**T
Order no. 585480

Shaft encoder EPR-WG3 binary code absolute
Resolution 1 degree for EPC48, EPC16**B**T
Order no. 585482

3m cable for EPR-WG2/WG3
Order no. 585494

5m cable for EPR-WG2/WG3
Order no. 585496

10m cable for EPR-WG2/WG3
Order no. 585495

Coupler WGK, 28 mm long
Order no. 585470

Angle-entry plug EPR-WG
Order no. 585489

12 Dimension drawings

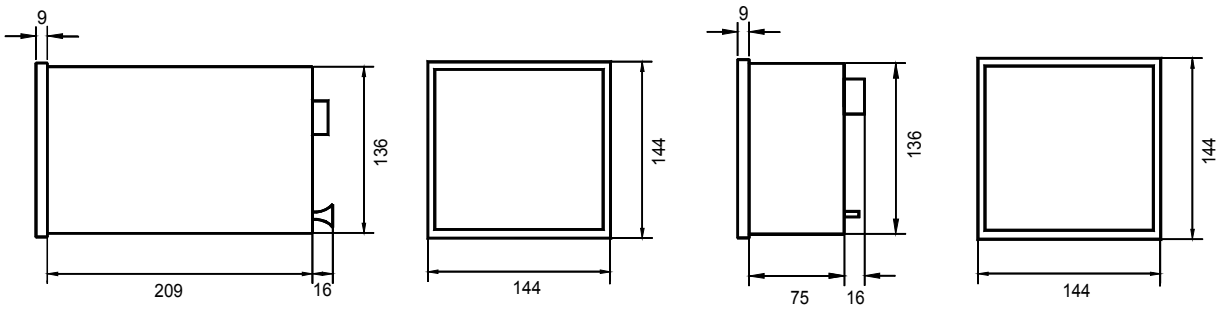

EPC48 EPC16

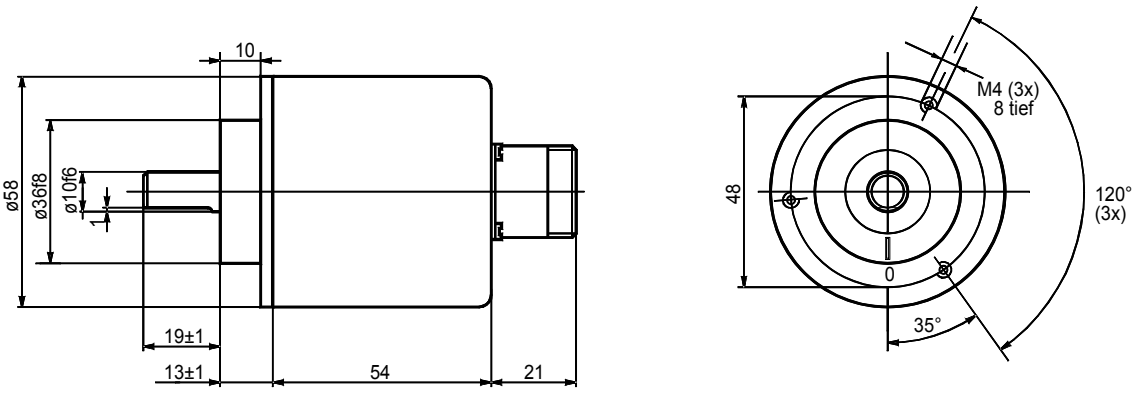

EPR-WG2, EPR-WG3

USER GUIDE EPC16/EPC48

H. ZANDER GmbH & Co. KG

Am Gut Wolf 15
52070 Aachen - Germany

Phone: +49 (0)241 910501-0
Fax: +49 (0)241 910501-38
eMail: info@zander-aachen.de

www.zander-aachen.de